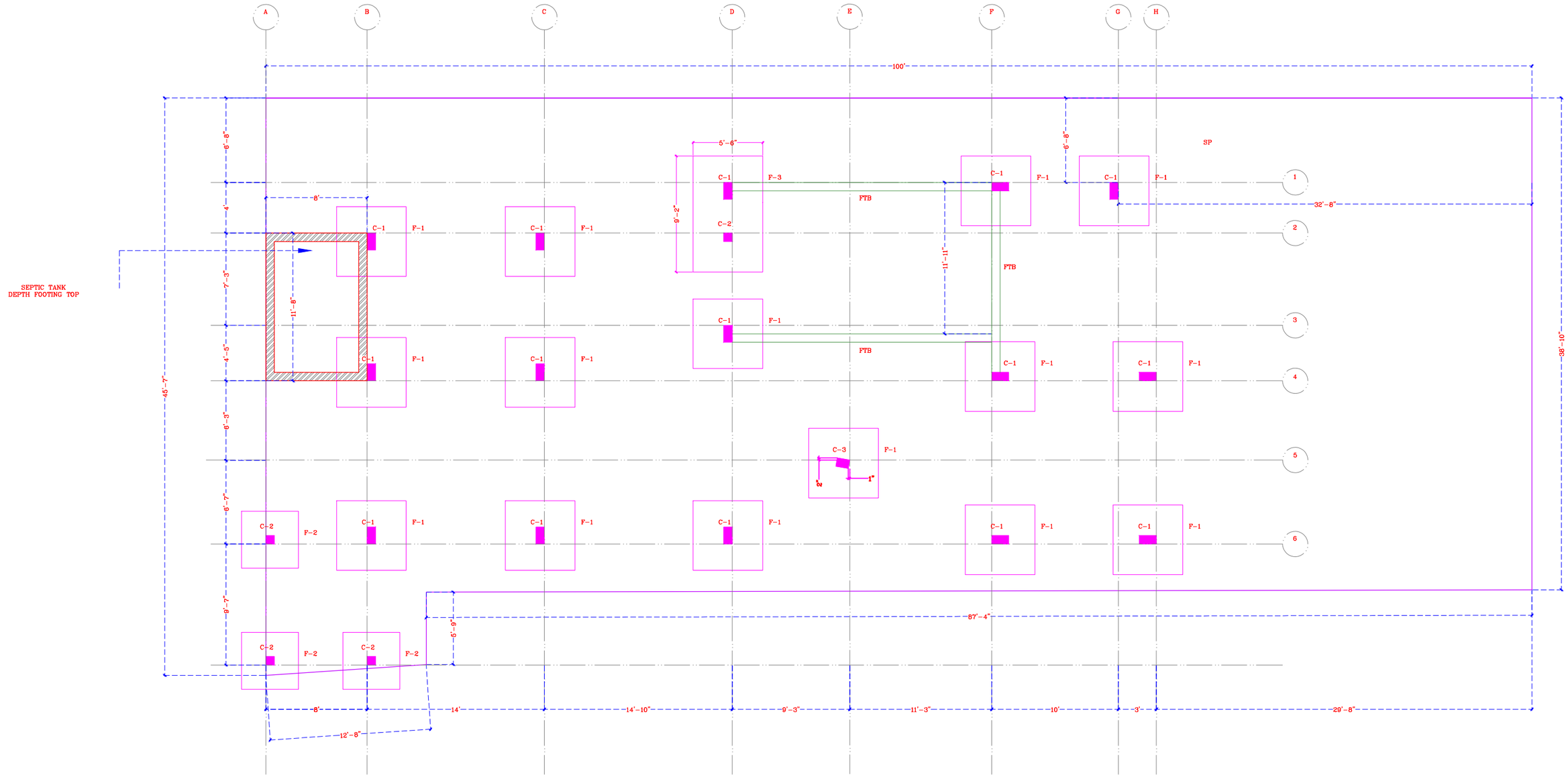

FOOTING REINFORCEMENT DETAIL						
TYPE	BEAM SIZE	STEEL				RING
		BOTTOM	TOP	BOTTOM EXTRA	TOP EXTRA	
FTB	8" X 16"	2-16MM ø	2-16MM ø	2-16MM ø	2-16MM ø	8MM ø @150MM C/C

FOOTING LAYOUT PLAN

PROPOSED LAYOUT FOR
MR.SANJAY JI

DESIGNED BY: AR. EKTA MISHRA

A4 A R C H I T E C T

NORTH

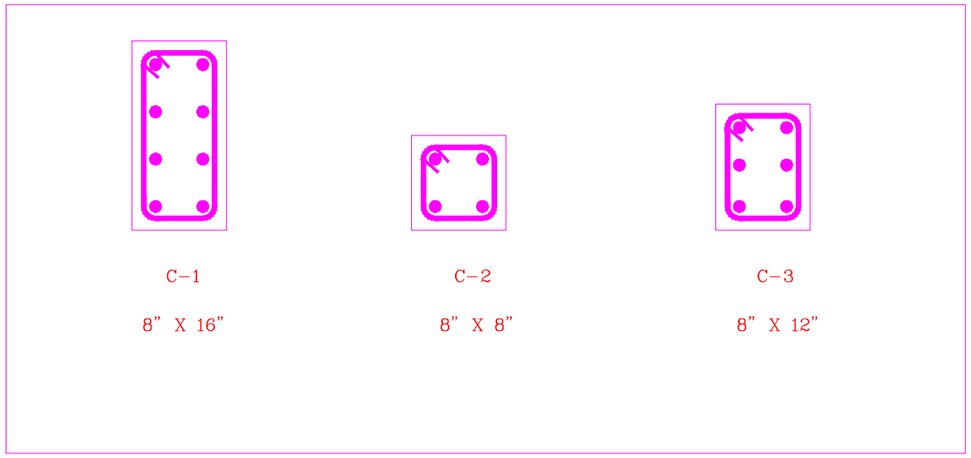

COLUMN REINFORCEMENT DETAIL			
TYPE	SIZE	MAIN BARS	RING
C-1	8" X 16"	8-16MM ø	8MM ø @6" C/C
C-2	8" X 8"	4-16MM ø	8MM ø @6" C/C
C-3	8" X 12"	6-12MM ø	8MM ø @6" C/C

FOOTING REINFORCEMENT DETAIL					
TYPE	P.C.C SIZE	FOTTING SIZE	DEPTH	REINFORCEMENT	
				IN S DIRECTION	IN L DIRECTION
F-1	5"6" X 5'6"	5"0" X 5'0"	20"	10MM ø @125MM C/C	10MM ø @125MM C/C
F-2	4"6" X 4'6"	4"0" X 4'0"	16"	10MM ø @125MM C/C	10MM ø @125MM C/C
F-3	5"6" X 9'2"	5"0" X 8'8"	16"	10MM ø @125MM C/C	10MM ø @125MM C/C

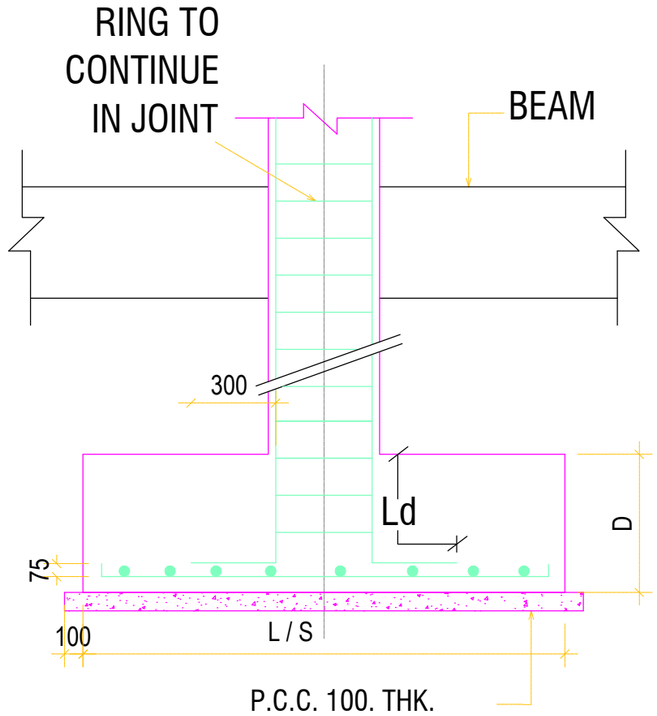

TYPICAL FOOTING SECTION

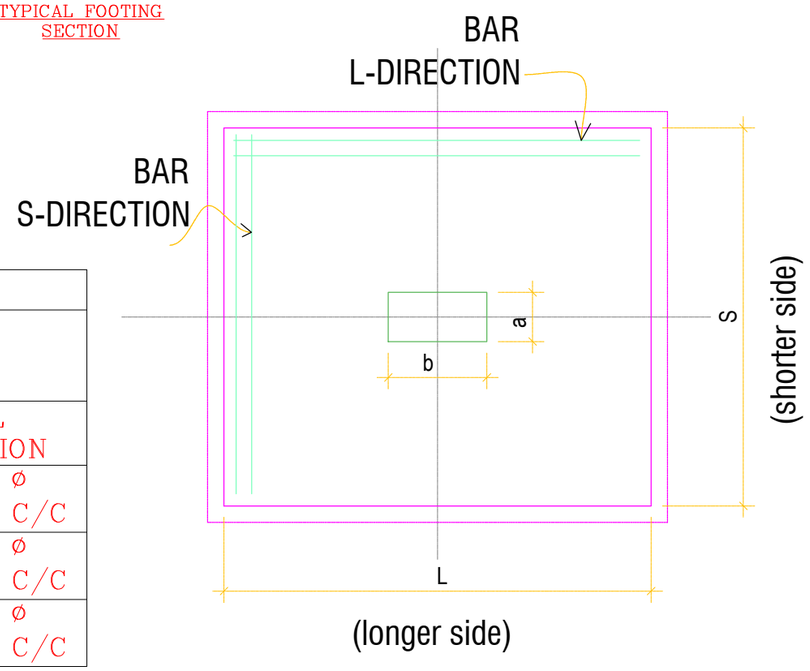

TYPICAL FOOTING PLAN

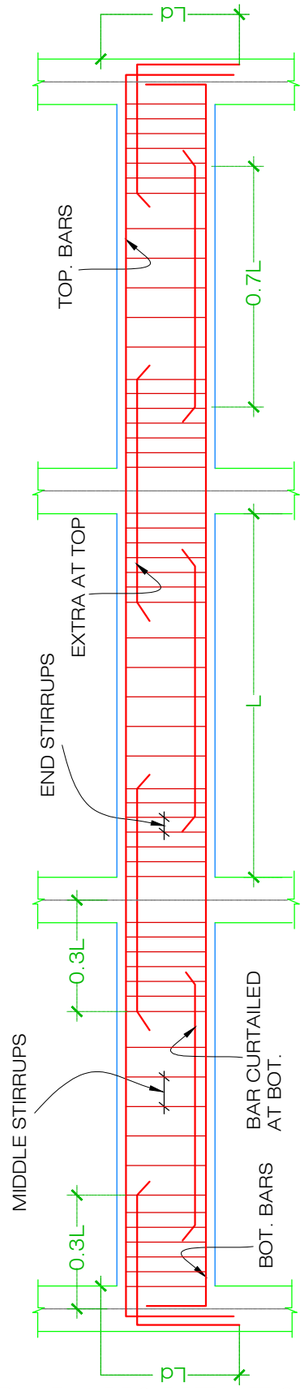

TYPICAL BEAM DETAIL

FOOTING AND COLUMN STRUCTURE DETAIL

PROPOSED LAYOUT FOR MR.SANJAY JI

DESIGNED BY: AR. EKTA MISHRA

A4 A R C H I T E C T

NORTH